ECO NO.	DATE	REV.	REVISION RECORD	AUTH.	DR.BY
6958	3-5-2013	A	ADD FUEL RETURN PART NO.		GA
7010	11-19-2013	B	CHANGE PUMP TO 55624.		GA

PART NO.	DESCRIPTION
47748	ENGINE HARNESS, 55B/55C/55D
44071	KIT A 55B/C/D
55475	KIT B 55D
32149	FILTER,REMOTE LUBE OIL
24977	TANK,COOLANT RECOVERY
36473	PANEL,CAPTAIN INSTRUMENT
36842	PANEL,ADMIRAL INSTRUMENT
30760	HARNESS, 15FT. EXT. 8 PIN
36557	HARNESS, 15FT. EXT. 4 PIN
47512	GLOWPLUG
47568	GASKET,HEAD
53538	GASKET,VALVE COVER
55472	GASKET,UPPER
55473	GASKET,COMPLETE
55458	INJECTOR PUMP 55D
54340	INJECTOR 55C
55455	INJECTOR 55D
(A) 47444	GASKET,INJECTOR
47410	WASHER,INJECTOR-CORRUGATED
47411	SHIELD,HEAT INJECTOR
47445	WASHER,HEAT SHIELD-INJECTOR

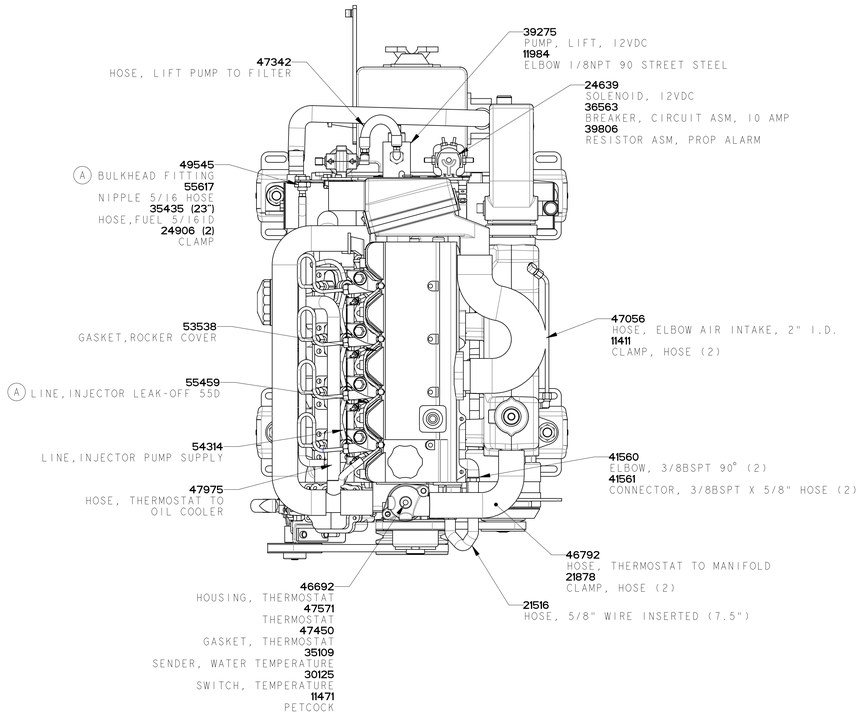

TUNE-UP SPECIFICATIONS	
FUEL INJECTION TIMING (BTDC)	13°
FIRING ORDER	1 - 3 - 4 - 2
INJECTION PRESSURE KG/CM² (PSI/MPa)	150 (2132/14.7)

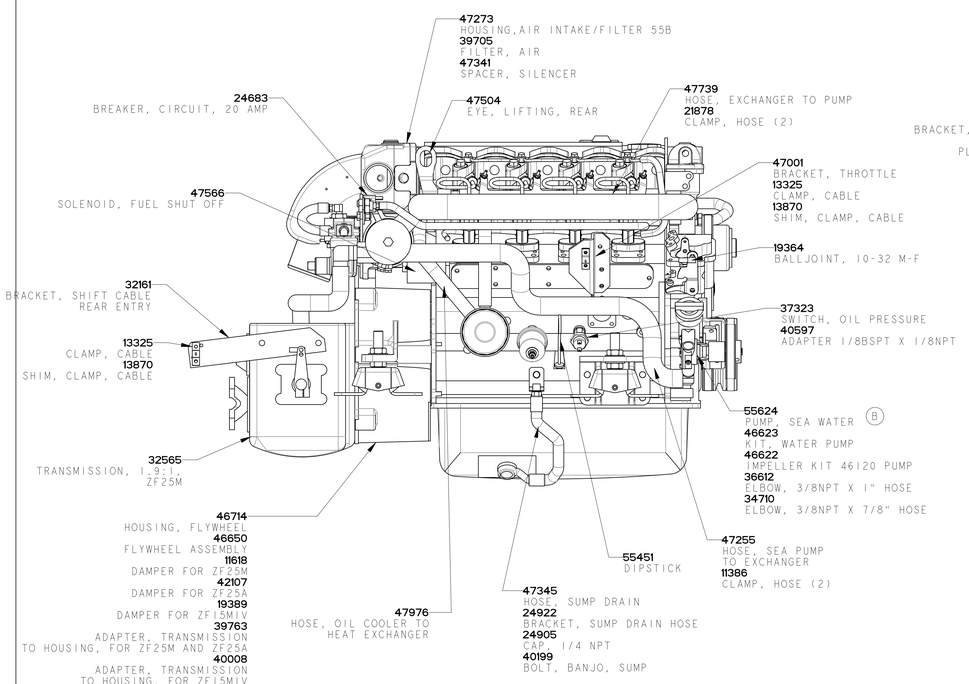

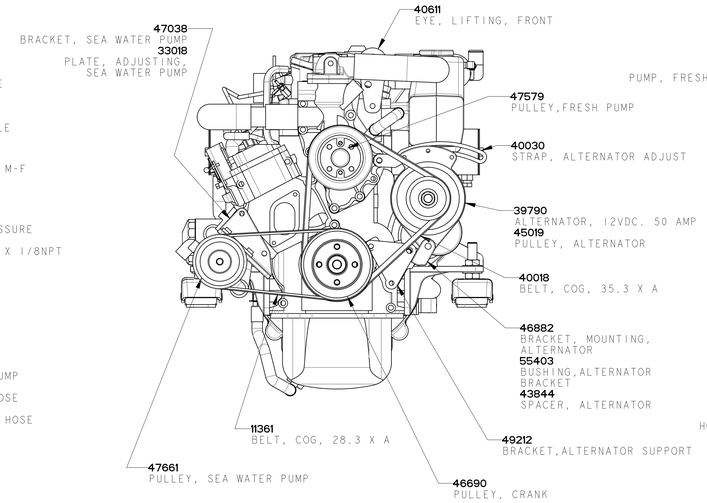

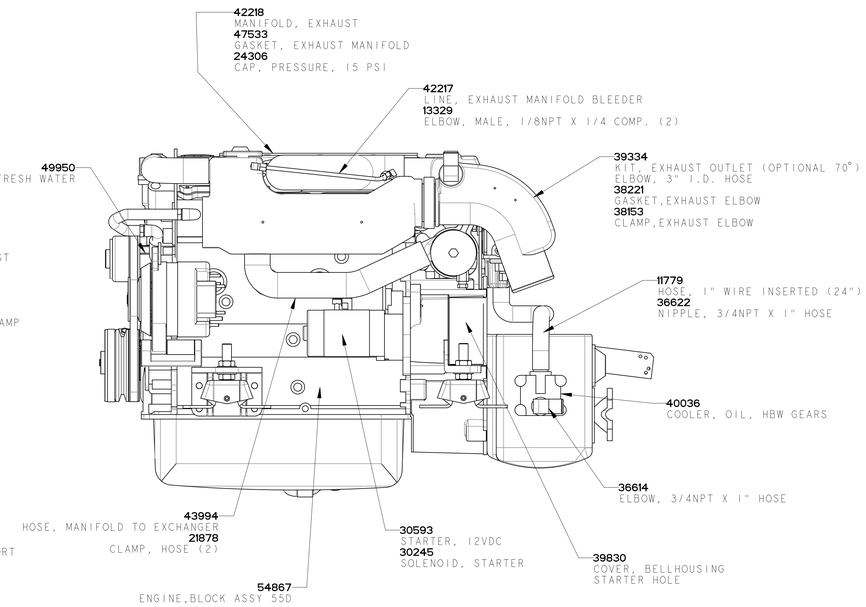

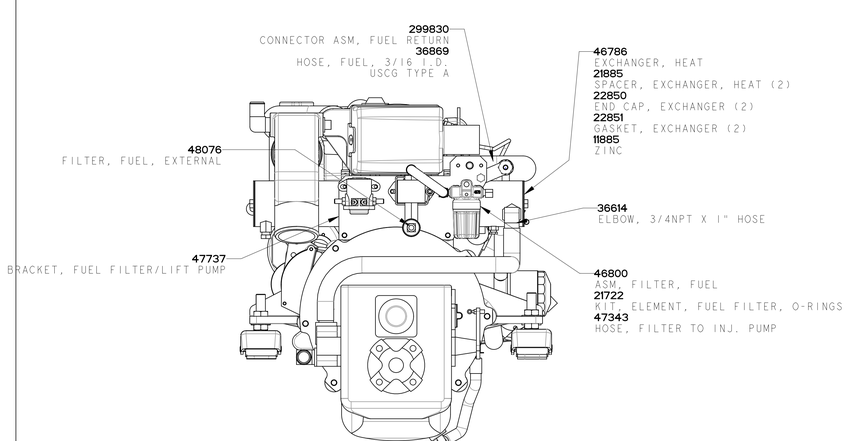

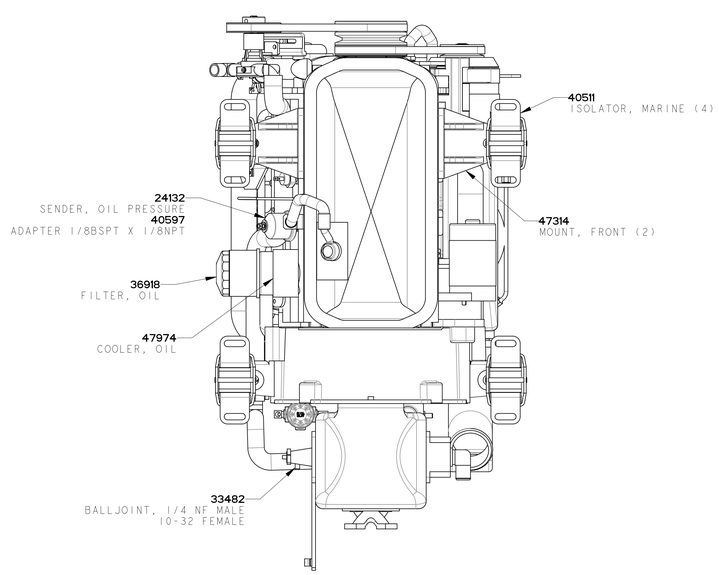

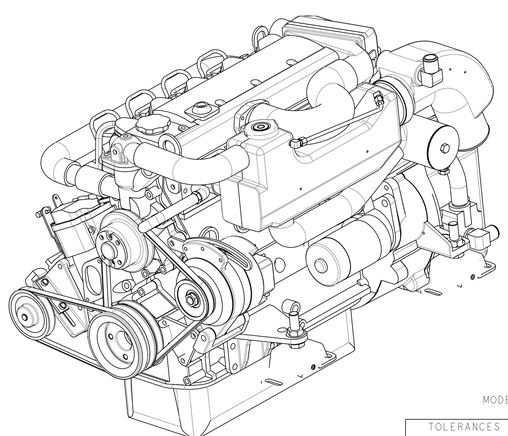

MODEL SHOWN WITH 50 AMP ALTERNATOR

TOLERANCES (UNLESS OTHERWISE NOTED)		WESTERBEKE		
INCHES .XX ±.02 .XXX ±.005 FAST ±.03 ANGLES: ±° FINISH	MILLIMETERS .X ± 1.0 .X ± .5 .XX ± .13	TITLE PARTS LIST - 55D WITH ZF25M TRANSMISSION		
		DRAWN BY GA	DATE 23/Jun/2010	MATERIAL:
DIMENSIONS INCHES MILLIMETERS (WHEN APPLICABLE)		APPROVED BY	DATE	
		SCALE 0.250	SIZE E	DRAWING NUMBER 54866
		SHT. 1 OF 1		REV. B